Метод на јазлови потенцијали

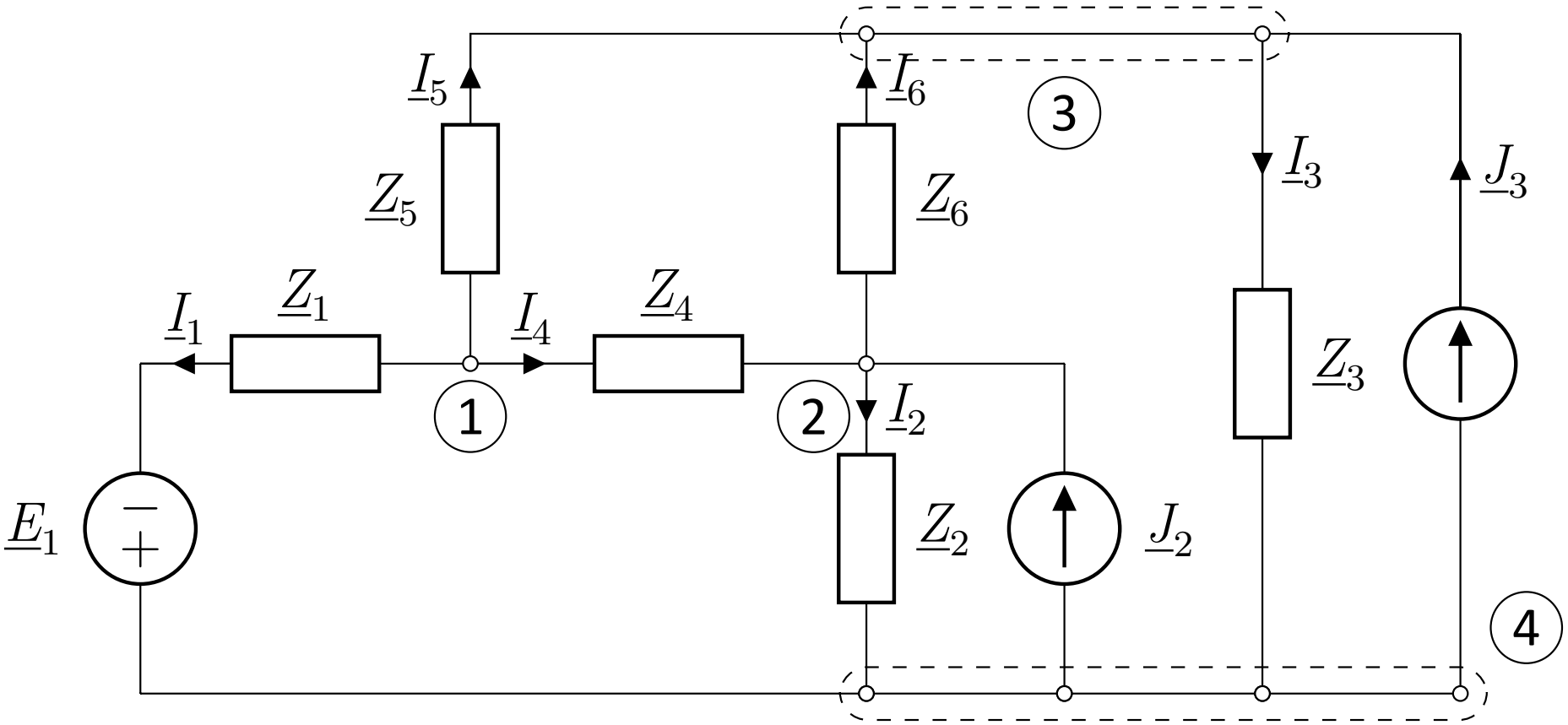

$$\underline{J}_1 = \frac{\underline{E}_1}{\underline{Z}_1}$$

Метод на јазлови потенцијали

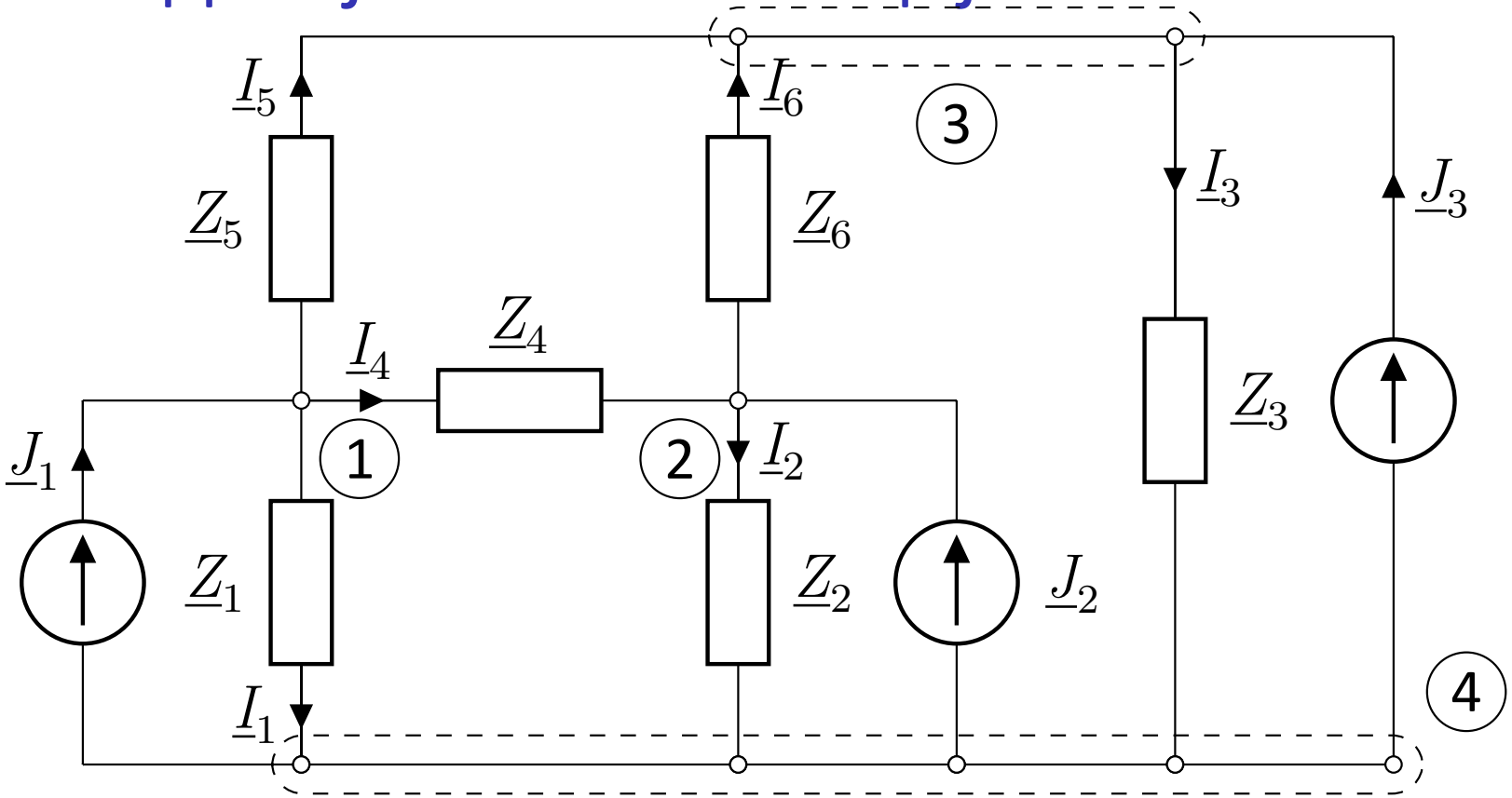

$$\underline{J}_1 = \underline{I}_1 + \underline{I}_4 + \underline{I}_5$$
$$\underline{J}_2 = \underline{I}_2 - \underline{I}_4 + \underline{I}_6$$
$$\underline{J}_3 = \underline{I}_3 - \underline{I}_5 - \underline{I}_6$$

јазел 4: $\underline{J}_1 + \underline{J}_2 + \underline{J}_3 = \underline{I}_1 + \underline{I}_2 + \underline{I}_3$ (сума од горните 3) $\Rightarrow \underline{U}_4 = 0$

Струи изразени преку напони

$$\underline{J}_1 = \frac{\underline{U}_1}{\underline{Z}_1} + \frac{\underline{U}_1 - \underline{U}_2}{\underline{Z}_4} - \frac{\underline{U}_1 - \underline{U}_3}{\underline{Z}_5},$$
$$\underline{J}_2 = \frac{\underline{U}_2}{\underline{Z}_2} - \frac{\underline{U}_1 - \underline{U}_2}{\underline{Z}_4} + \frac{\underline{U}_2 - \underline{U}_3}{\underline{Z}_6},$$
$$\underline{J}_3 = \frac{\underline{U}_3}{\underline{Z}_3} - \frac{\underline{U}_1 - \underline{U}_3}{\underline{Z}_5} - \frac{\underline{U}_2 - \underline{U}_3}{\underline{Z}_6}.$$

$$\left(\frac{1}{\underline{Z}_1} + \frac{1}{\underline{Z}_4} + \frac{1}{\underline{Z}_5}\right)\underline{U}_1 - \frac{1}{\underline{Z}_4}\underline{U}_2 - \frac{1}{\underline{Z}_5}\underline{U}_3 = \underline{J}_1,$$
$$-\frac{1}{\underline{Z}_4}\underline{U}_1 + \left(\frac{1}{\underline{Z}_2} + \frac{1}{\underline{Z}_4} + \frac{1}{\underline{Z}_6}\right)\underline{U}_2 - \frac{1}{\underline{Z}_6}\underline{U}_3 = \underline{J}_2,$$
$$-\frac{1}{\underline{Z}_5}\underline{U}_1 - \frac{1}{\underline{Z}_6}\underline{U}_2 + \left(\frac{1}{\underline{Z}_3} + \frac{1}{\underline{Z}_5} + \frac{1}{\underline{Z}_6}\right)\underline{U}_3 = \underline{J}_3,$$
$$\underline{\mathbf{Y}} \cdot \underline{\mathbf{U}} = \underline{\mathbf{J}},$$

Матрица $\underline{\mathbf{Y}}$

$$\underline{\mathbf{Y}} = \begin{bmatrix} \frac{1}{\underline{Z}_1} + \frac{1}{\underline{Z}_4} + \frac{1}{\underline{Z}_5} & -\frac{1}{\underline{Z}_4} & -\frac{1}{\underline{Z}_5} \\ -\frac{1}{\underline{Z}_4} & \frac{1}{\underline{Z}_2} + \frac{1}{\underline{Z}_4} + \frac{1}{\underline{Z}_6} & -\frac{1}{\underline{Z}_6} \\ -\frac{1}{\underline{Z}_5} & -\frac{1}{\underline{Z}_6} & \frac{1}{\underline{Z}_3} + \frac{1}{\underline{Z}_5} + \frac{1}{\underline{Z}_6} \end{bmatrix},$$

- елементот $\underline{Y}_{kk}$ е еднаков на сумата на адмитанциите на сите елементи на кои им припаѓа јазелот k,
- елементот $\underline{Y}_{ik}$ е еднаков на сумата на адмитанциите на сите елементи што директно ги поврзуваат јазлите i и k, со променет знак.

Метод на јазлови потенцијали – матрично

Кирхофовиот закон за струи за сите јазли одеднаш

$$\underline{\mathbf{J}} = \mathbf{C} \cdot \underline{\mathbf{I}} = \mathbf{C} \cdot \begin{bmatrix} \underline{I}_1 & \underline{I}_2 & \underline{I}_3 & \underline{I}_4 & \underline{I}_5 & \underline{I}_6 \end{bmatrix}^{\mathrm{T}}$$

$$\mathbf{C} = \begin{bmatrix} 1 & 0 & 0 & 1 & 1 & 0 \\ 0 & 1 & 0 & -1 & 0 & 1 \\ 0 & 0 & 1 & 0 & -1 & -1 \end{bmatrix},$$

матрица на инциденција

$$\mathbf{A} = \mathbf{C}^{\mathrm{T}} = \begin{bmatrix} 1 & 0 & 0 \\ 0 & 1 & 0 \\ 0 & 0 & 1 \\ 1 & -1 & 0 \\ 1 & 0 & -1 \\ 0 & 1 & -1 \end{bmatrix}.$$

Метод на јазлови потенцијали – матрично

$$\underline{\mathbf{U}}_{\mathrm{GR}} = \mathbf{A} \cdot \underline{\mathbf{U}},$$

$$\underline{\mathbf{U}}_{\mathrm{GR}} = \mathbf{A} \cdot \underline{\mathbf{U}} = \begin{bmatrix} \underline{U}_1 \\ \underline{U}_2 \\ \underline{U}_3 \\ \underline{U}_1 - \underline{U}_2 \\ \underline{U}_1 - \underline{U}_3 \\ \underline{U}_2 - \underline{U}_3 \end{bmatrix},$$

$$\underline{\mathbf{Z}}_{\mathrm{GR}} = \begin{bmatrix} \underline{Z}_1 & 0 & 0 & 0 & 0 & 0 \\ 0 & \underline{Z}_2 & 0 & 0 & 0 & 0 \\ 0 & 0 & \underline{Z}_3 & 0 & 0 & 0 \\ 0 & 0 & 0 & \underline{Z}_4 & 0 & 0 \\ 0 & 0 & 0 & 0 & \underline{Z}_5 & 0 \\ 0 & 0 & 0 & 0 & 0 & \underline{Z}_6 \end{bmatrix},$$

$$\underline{\mathbf{I}} = \underline{\mathbf{Z}}_{\mathrm{GR}}^{-1} \cdot \underline{\mathbf{U}}_{\mathrm{GR}} = \underline{\mathbf{Z}}_{\mathrm{GR}}^{-1} \cdot \mathbf{A} \cdot \underline{\mathbf{U}},$$

$$\underline{\mathbf{J}} = \mathbf{A}^{\mathrm{T}} \cdot \underline{\mathbf{Z}}_{\mathrm{GR}}^{-1} \cdot \mathbf{A} \cdot \underline{\mathbf{U}} \;\Rightarrow\; \boxed{\underline{\mathbf{Y}} = \mathbf{A}^{\mathrm{T}} \cdot \underline{\mathbf{Z}}_{\mathrm{GR}}^{-1} \cdot \mathbf{A}}$$